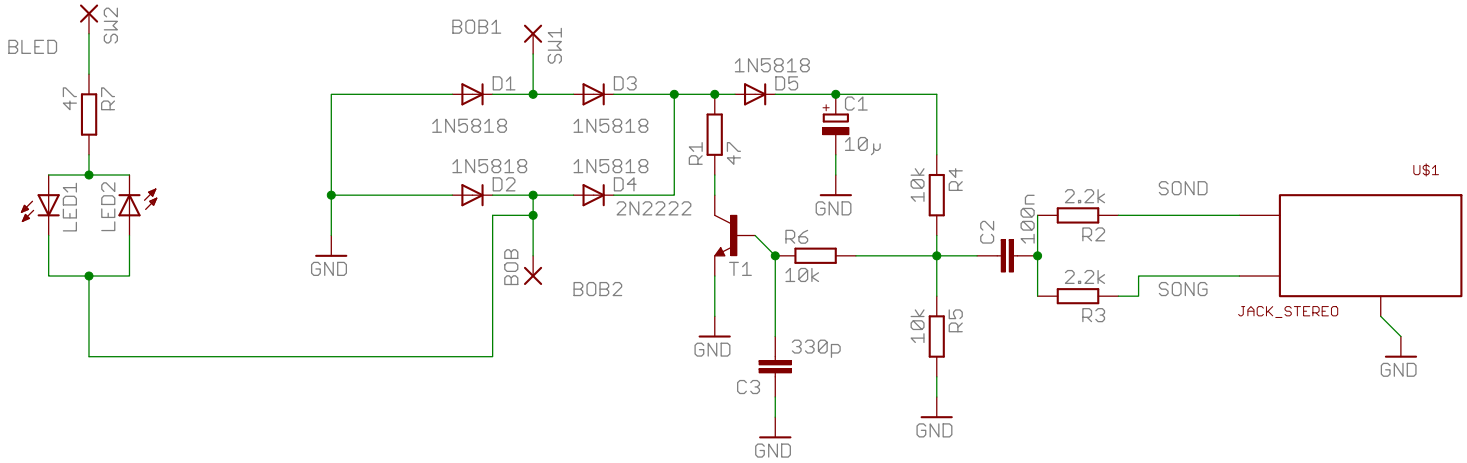

TITLE: receiver

Document Number:

REV:

Date: 21/04/2023 10:54:38

Sheet: 1/1